Pipe Size	Hole Size	Weight
66"	84"	29,950#
72"	91"	29,275#

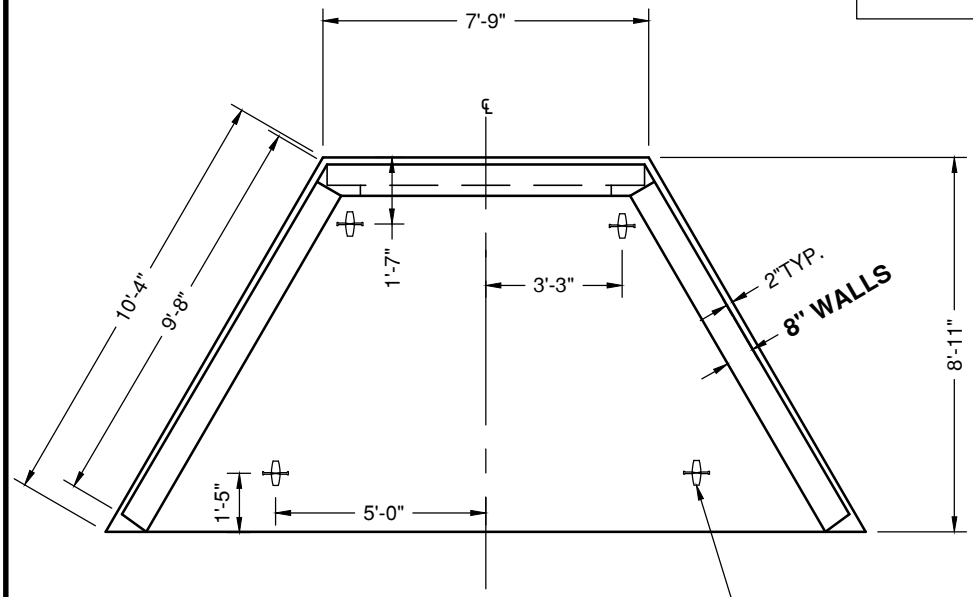

PLAN VIEW

#5 HANDLES
4 PLACES

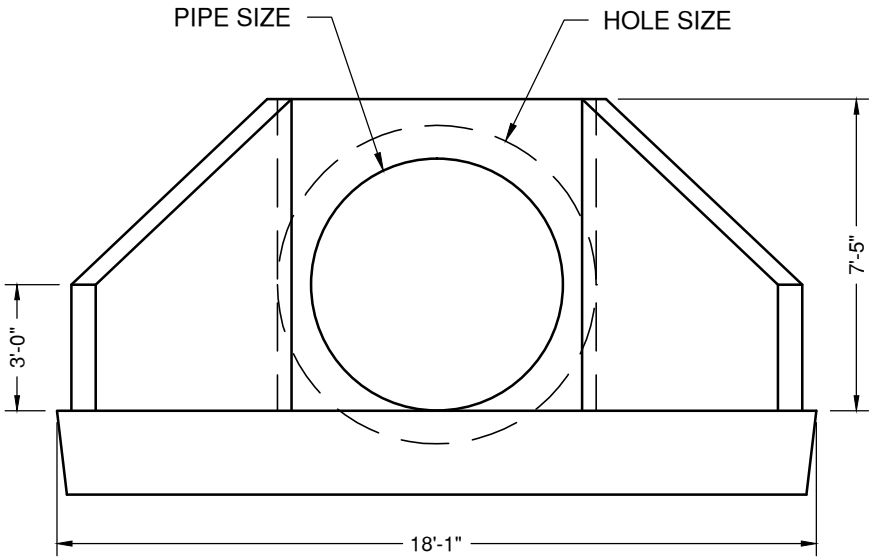

FRONT VIEW

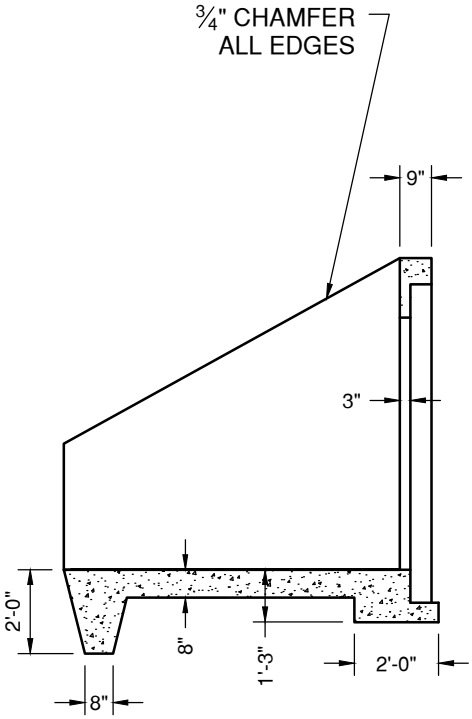

SECTION VIEW

S & M
PRECAST, INC.

"NPCA" CERTIFIED PLANT
16700 SIMA GRAY RD, HENRYVILLE, IN 47126
Phone: (812) 246-6258 Fax: (812) 294-4862

SPECIFICATIONS

CONCRETE: 4500 PSI @ 28 DAYS

REINFORCEMENT: ASTM A-615, GR 60

WEIGHT: See Chart

SLOPED & FLARED HEADWALL
66" - 72" PIPE

DATE: 1-3-17 DWG #HW-SF-72